Bangladesh Army University of Engineering & Technology
Department of Electrical & Electronic Engineering

Lecture: 17 - 18

Course Code: EEE 1261

Course Title: Electronic Devices and Circuits

Course Teacher: Ferdous Farjana

Designation: Lecturer, Dept. of EEE, BAUET

Reference Books

- **Electronic Devices and Circuit Theory: Robert L. Boylestad and Louis Nashelsky.**
- Electronic Principles: Albert P. Malvino.
- Micro Electronics Circuits: Adel S. Sedra & Keneth C. Smith: Oxford University Press.
- Operational Amplifiers and Linear Integrated Circuits: Robert F. Coughlin: Prentice Hall of India Private Limited.

Zener Diode: Mathematical Problems

EXAMPLE 2.25 The network of Fig. 2.110 is designed to limit the voltage to 20 V during the positive portion of the applied voltage and to 0 V for a negative excursion of the applied voltage. Check its operation and plot the waveform of the voltage across the system for the applied signal. Assume the system has a very high input resistance so it will not affect the behavior of the network.

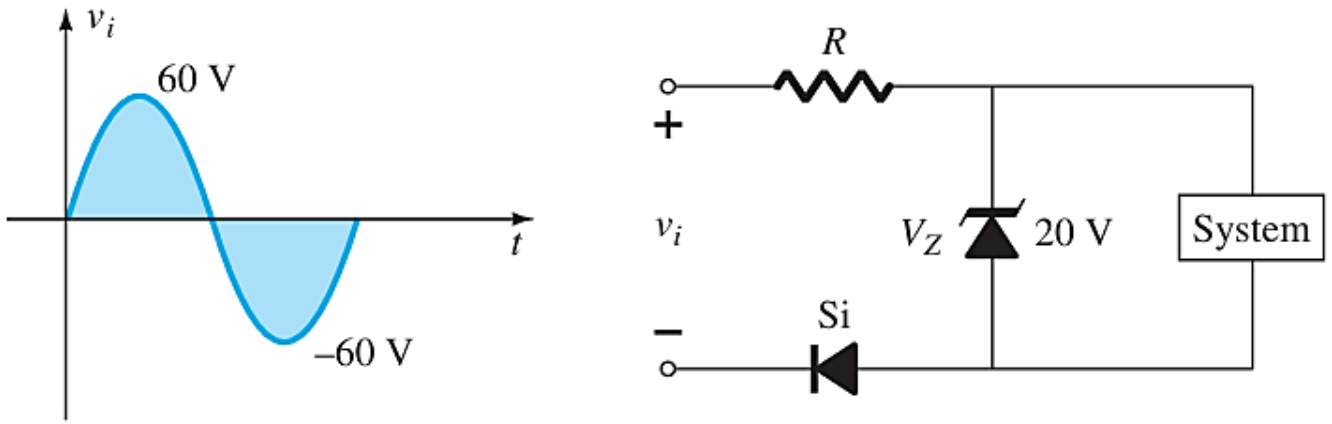

FIG. 2.110
Controlling network for Example 2.25.

Solution: For positive applied voltages less than the Zener potential of 20 V the Zener diode will be in its approximate open-circuit state, and the input signal will simply distribute itself across the elements, with the majority going to the system because it has such a high resistance level.

Once the voltage across the Zener diode reaches 20 V the Zener diode will turn on as shown in Fig. 2.111a and the voltage across the system will lock in at 20 V. Further increases in the applied voltage will simply appear across the series resistor with the voltage across the system and the forward-biased diode remaining fixed at 20 V and 0.7 V, respectively. The voltage across the system is fixed at 20 V, as shown in Fig. 2.111a, because the 0.7 V of the diode is not between the defined output terminals. The system is therefore safe from any further increases in applied voltage.

For the negative region of the applied signal the silicon diode is reverse biased and presents an open circuit to the series combination of elements. The result is that the full negatively applied signal will appear across the open-circuited diode and the negative voltage across the system locked in at 0 V, as shown in Fig. 2.111b.

The voltage across the system will therefore appear as shown in Fig. 2.111c.

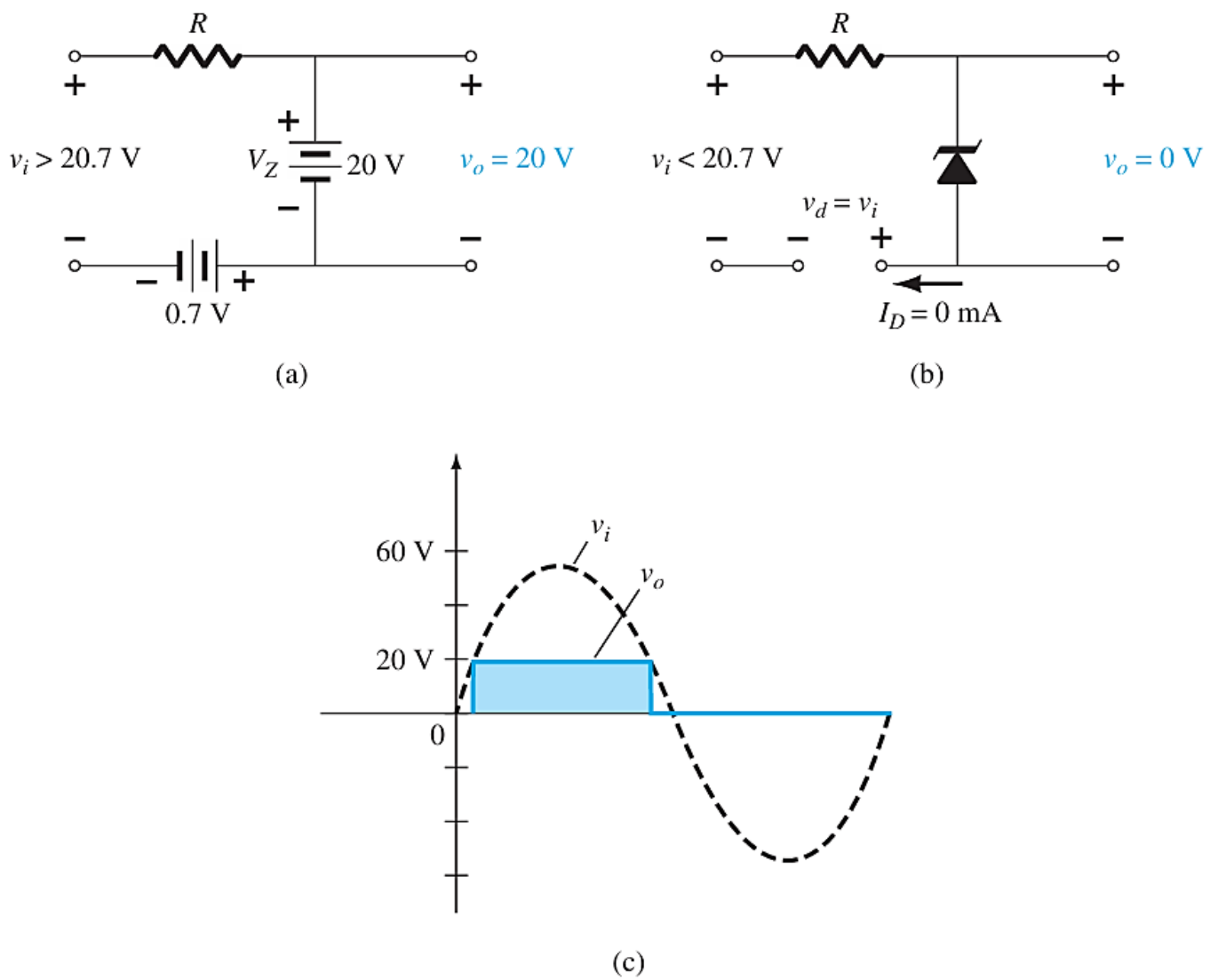

FIG. 2.111

Response of the network of Fig. 2.110 to the application of a 60-V sinusoidal signal.

EXAMPLE 2.26

a. For the Zener diode network of Fig. 2.115, determine V_L, V_R, I_Z, and P_Z.
b. Repeat part (a) with $R_L = 3\ \text{k}\Omega$.

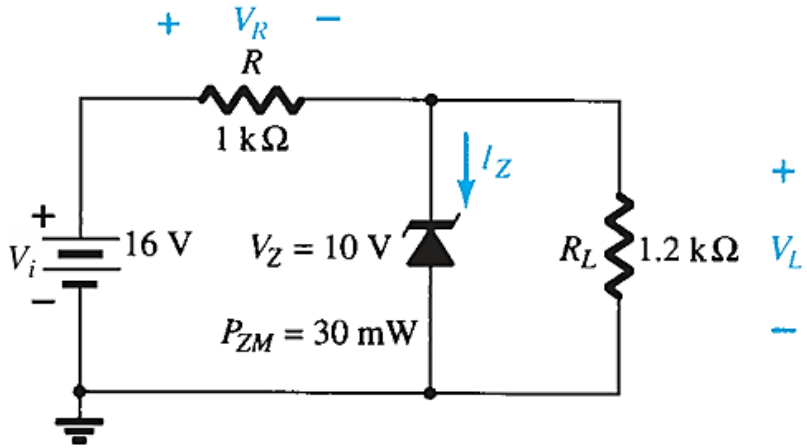

FIG. 2.115
Zener diode regulator for Example 2.26.

Solution:

a. Following the suggested procedure, we redraw the network as shown in Fig. 2.116. Applying Eq. (2.16) gives

$$V = \frac{R_L V_i}{R + R_L} = \frac{1.2\ \text{k}\Omega(16\ \text{V})}{1\ \text{k}\Omega + 1.2\ \text{k}\Omega} = 8.73\ \text{V}$$

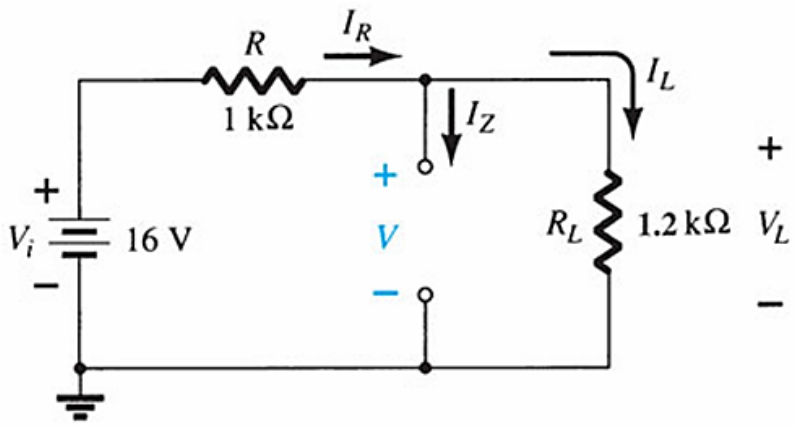

FIG. 2.116
Determining V for the regulator of Fig. 2.115.

Since $V = 8.73$ V is less than $V_Z = 10$ V, the diode is in the "off" state, as shown on the characteristics of Fig. 2.117. Substituting the open-circuit equivalent results in the same network as in Fig. 2.116, where we find that

$$V_L = V = \mathbf{8.73\ V}$$

$$V_R = V_i - V_L = 16\ \text{V} - 8.73\ \text{V} = \mathbf{7.27\ V}$$

$$I_Z = \mathbf{0\ A}$$

and

$$P_Z = V_Z I_Z = V_Z(0\ \text{A}) = \mathbf{0\ W}$$

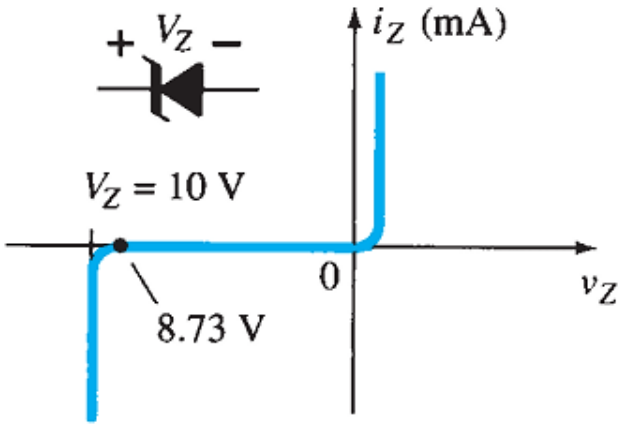

FIG. 2.117
Resulting operating point for the network of Fig. 2.115.

b. Applying Eq. (2.16) results in

$$V = \frac{R_L V_i}{R + R_L} = \frac{3\ \text{k}\Omega(16\ \text{V})}{1\ \text{k}\Omega + 3\ \text{k}\Omega} = 12\ \text{V}$$

Since $V = 12$ V is greater than $V_Z = 10$ V, the diode is in the "on" state and the network of Fig. 2.118 results. Applying Eq. (2.17) yields

$$V_L = V_Z = \mathbf{10\ V}$$

and

$$V_R = V_i - V_L = 16\ \text{V} - 10\ \text{V} = \mathbf{6\ V}$$

with

$$I_L = \frac{V_L}{R_L} = \frac{10\ \text{V}}{3\ \text{k}\Omega} = 3.33\ \text{mA}$$

and

$$I_R = \frac{V_R}{R} = \frac{6\ \text{V}}{1\ \text{k}\Omega} = 6\ \text{mA}$$

so that

$$\begin{aligned} I_Z &= I_R - I_L\ [\text{Eq. (2.18)}] \\ &= 6\ \text{mA} - 3.33\ \text{mA} \\ &= \mathbf{2.67\ mA} \end{aligned}$$

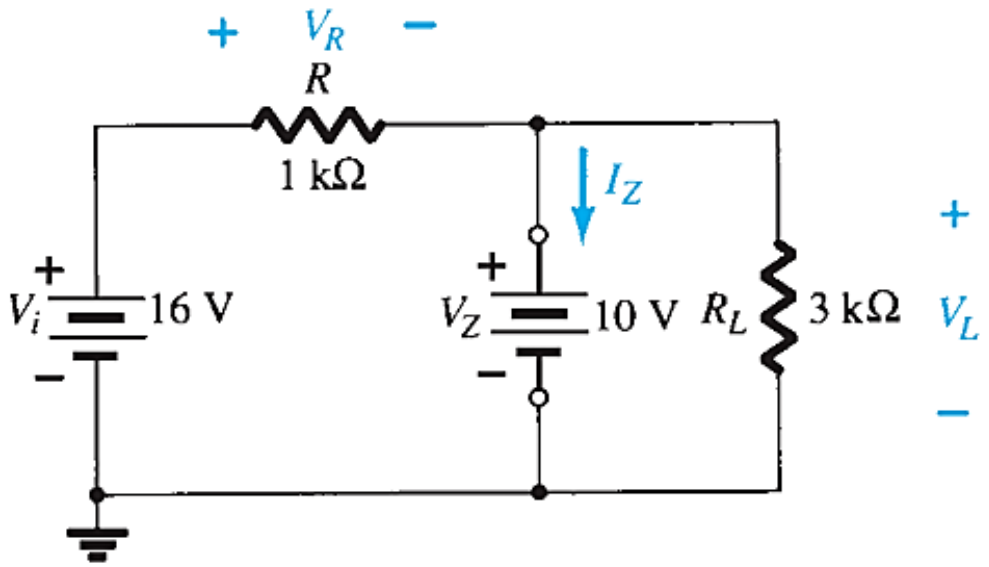

FIG. 2.118
Network of Fig. 2.115 in the "on" state.

The power dissipated is

$$P_Z = V_Z I_Z = (10\text{ V})(2.67\text{ mA}) = \mathbf{26.7\ mW}$$

which is less than the specified $P_{ZM} = 30$ mW.

THANK YOU